RELEASED

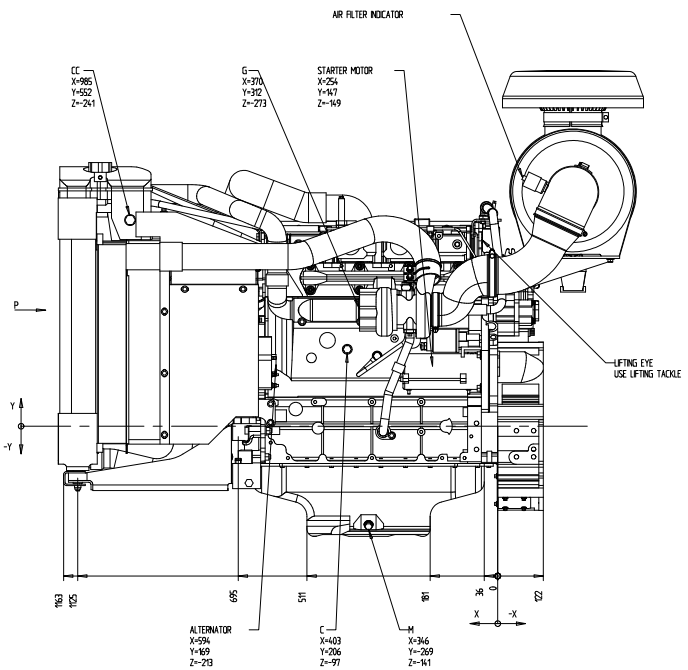

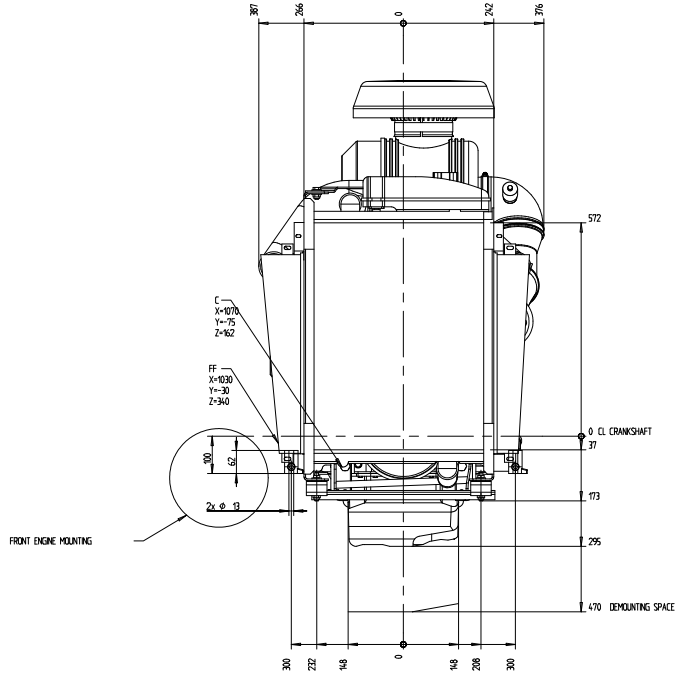

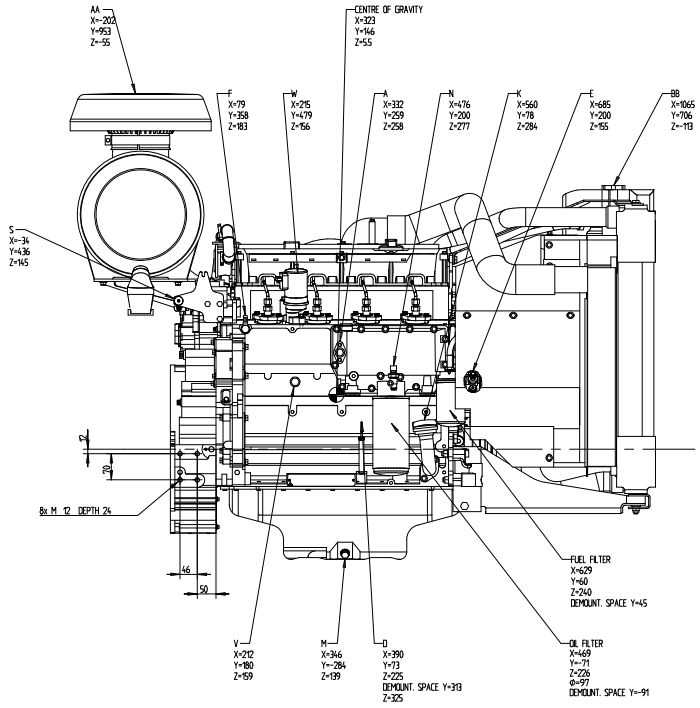

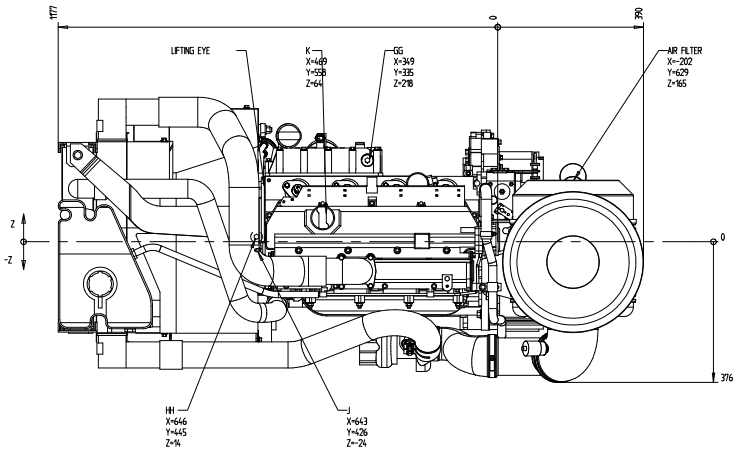

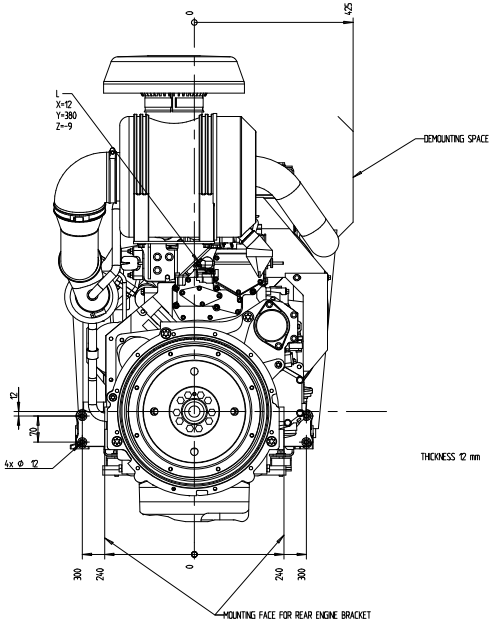

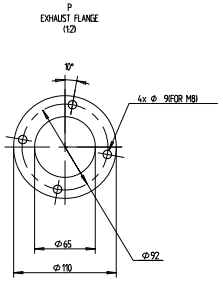

A = ENGINE HEATER (OPTION)

C = 2x COOLANT DRAIN M14x15

D = OIL DIPSTICK

E = FUEL INLET, FOR HOSE INTERNAL ⌀12

F = FUEL RETURN AND VENT SCREW, FOR HOSE INTERNAL ⌀10

G = EXHAUST OUTLET, TURBO INNER ⌀54

J = AIR VENTING FOR COOLANT FILLING, THERMOSTAT HOUSING

K = 2x OIL FILLER CAP

L = COOLANT TEMP SWITCH/SENDER M14x15

M = 2x OIL DRAIN PLUG M18x15

N = OIL PRESSURE SENDER M14x15 (OPTION)

S = SPEED FINE ADJUDTMENT

V = OIL PRESSURE SWITCH M14x15
(MOUNTED AT 'N' WHEN OIL PRESSURE SENDER NOT ORDERED)

W = STOP SOLENOID

AA= AIR FILTER TOP

BB= WATER FILLING + PRESSURE CAP

CC= COOLANT LEVEL SWITCH

FF= CHARGE AIR COOLER DRAIN M8x1

GG= TO ENGINE HEATER (EXTERNAL) M26x15

HH= FROM ENGINE HEATER (EXTERNAL) M26x15

SCALE 15

SYMBOLS, DESIGNATIONS AND GENERAL DRAWING METHODS STD 90-0005
ISO STD 5625000

ENGINE DIMENSIONS
TAD530GE/531GE MECH

DIMENSION DRAWING

VOLVO PENTA

3593964 | 01 | 1(1)